LTR	REVISION	CAR	DATE	CK

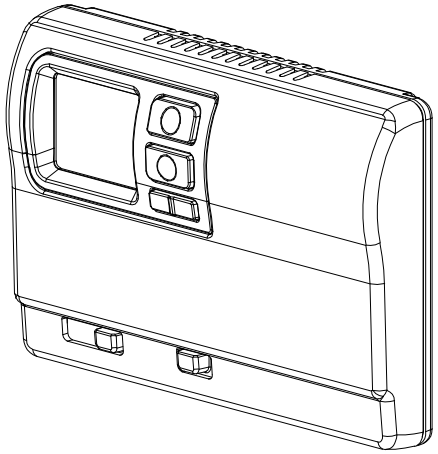

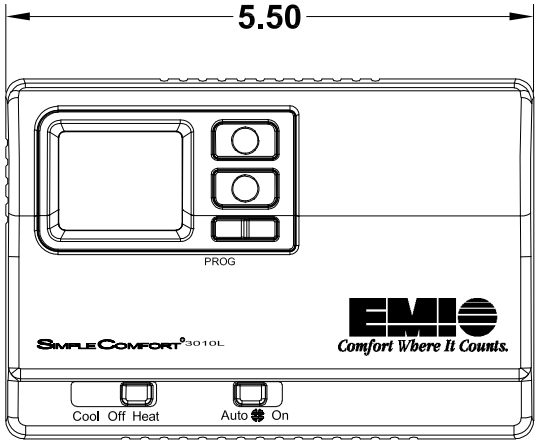

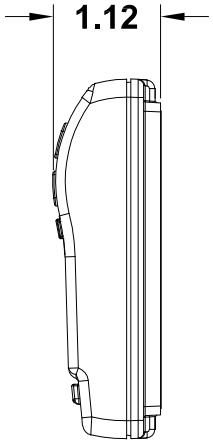

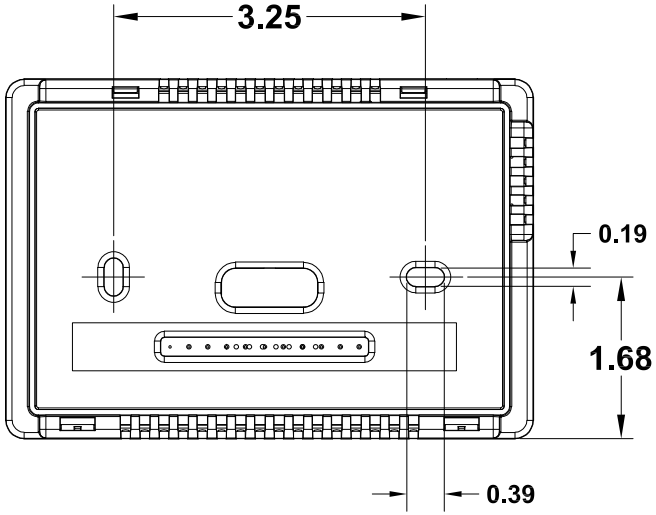

SC3010L-SL1017
EMI #240008208

ICM CONTROLS
7313 William Barry Blvd
North Syracuse, NY 13212
PHONE (315) 362-5266
FAX (315) 362-5276

This Document contains Proprietary information and is subject to the condition that the information be retained in full Confidence not to be Copied, Incorporated in any form, or disclosed to a third party without the explicit Written consent of ICM Controls Corporation.

www.icmcontrols.com

DWN BY:	DATE:	PART No.:
CHK BY:	DATE:	TITLE:
APP BY:	DATE:	
TOLERANCES .XX = .02		SCALE: 1/2 X DRAWING No.