RETROAIRE™ Submittal

Model: R35C/H

Replacement 35 Series Horizontal PTACs & PTHPs

R 3 5 [ ] [ ][ ] [ ] [ ] [ ] [ ] A [ ] [ ] [ ][ ]

Model Series:
[**35**=Repl.]

Chassis Type:
[**C**=straight cooling]
[**H**=heat pump unit]

Capacity (Heat Pump 9-15 Only):
[**09**=9,000 Btu/h]
[**12**=12,000 Btu/h]
[**15**=15,000 Btu/h]
[**18**=18,000 Btu/h] (Straight Cooling Only)

Voltage:
[**A**=115 V / 1 / 60] (Models 9,000 Btu/h only)
[**D**=208/230 V / 1 / 60]
[**E**=265/277 V / 1 / 60] (NA 18,000 Btu/h)

Auxiliary Heat Options: **[*See Specifications- Electrical Data]**
[**0**=no electric heat]
[**2**=2 KW electric heat]
[**3**=3 KW electric heat]
[**4**=4 KW electric heat]
[**5**=5 KW electric heat]

Control Options
[**0**=(UM) unit-mount with elec. heat or no elec. heat]
[**1**=(RMT) remote tstat with elec. heat or no elec. heat]
[**2**=(UM) unit-mount hyd. heat N/O or N/C valve (line volt.)]
[**3**=(RMT) remote tstat hyd. heat N/O or N/C valve (line volt.)]
[**4**=(UM) unit-mount hyd. heat N/O or N/C valve (24 volt.)]
[**5**=(RMT) remote tstat hyd. heat N/O or N/C valve (24 volt.)]

Air Options:
[**C**=front air intake, no fresh air damper]
[**D**=front air intake, with fresh air damper]

Open Options:
[**A**=standard]

Coil Options:
[**A**=standard]
[**C**=coated coil]

Compressor:
[**A**=Tecumseh]
[**T**=Toshiba]
[**L**=LG]

Special Rev:

Product Revision:

Direct Chassis Replacement for :

- Direct replacement for: Type 45/16 by AAF, McQuay, Comitale, Ice Air, American Standard, Remington, Singer, Nelson Aire, Ice Cap, Islandaire, Carteret, Adirondack Aire & McQuay PNES/PNHS

Approved:	
Reviewed:	
Contact:	
Address:	
Phone:	
Unit Tag #	
Revision:	

Number of Units Ordered

Approval

By:

Made in the USA

C ETL LISTED US
Intertek

ECR international

Manufactured by:
ECR International Inc.
2201 Dwyer Avenue, Utica, NY 13501
Tel. 800 325 5479
www.ecrinternational.com
240008054 REV E [02/17/2021]

RETROAIRE™

Indicate the *quantity* of field installed accessories, required for each unit

QTY Ordered	Description
	Thermostat, Single-Stage, 1-Heat/1-Cool, 24Vac, Programmable, Manual Changeover (PN **240008208**)
	Thermostat, Digital, Single-Stage, 1-Heat/1-Cool, 24Vac, Programmable, Auto Changeover (PN **240008210**)
	Thermostat, T9000, Wireless, Battery, Single Stage, 1-Ht/1-Cl, 5/2-Prog, MCO [#240009905 also required] (PN **240009781**)
	Remote Control Node, T9000, Printed Circuit Board, Wireless, 24Vac, 1/unit req'd [#240009781 also required] (PN **240009905**)
	Isolation Ball Valve, 1/2", Sweat Connections (PN **107000001**)
	Kit, Cabinet Wall Sleeve & Louver, No/Electric Heat, Aluminum Outdoor & Supply Louvers, Control Door, R35 (PN **550000190**)
	Kit, Hydronic Cabinet, Wall Sleeve, Louver, Aluminum Outdoor & Supply Louvers, 42" x 16.5" R10 (PN **550001170)**
	Kit, Hydronic/Steam Coil Assembly, R10 (PN **550000168**)
	Kit, Aquastat, Hydronic Heat, Hot Water Sensor-Relay [Energizes Fan] (PN **550000383**)
	Kits, Water Valves, w/ Actuator, 2/3-Way, Line/24Vac, NO/NC, Sweat (**Several Kits Available-Consult Factory**)

Job-Guide Specifications

- Standard Warranty: 1 Year - Parts & 5 Year - Compressor
- High Pressure Switch with Integral Compressor Lockout
- Microprocessor Control Board
- Diagnostic LED Codes with Test Mode
- Thermally-protected PSC fan motors
- Indoor Coil Freeze & Anti-Short Cycle (Comp), Protections
- Single Stage Heating Operation (w/ or w/o Electric Heat)
- DOE Performance Qualified & Listed
- ETL-US & Canada Listed for Safety to UL484 Standard - CSA 22.2 No. 117
- Reversing Valve Energized in Cooling (Heat Pumps)
- Meets ASHRAE 90.1-2013 for Replacement Efficiencies

Operating Range

Mode		OD Amb. Temp	ID Amb. Temp
Cooling	Max	105ºF (41ºC) DB	80ºF (27ºC) DB
	Min	32ºF (0ºC) DB	60ºF (19ºC) DB
Heating	Max	75ºF (24ºC) DB	80ºF (27ºC) DB
	Min	40ºF (4.4ºC) DB	65ºF (18ºC) DB

Electrical Plug Configurations

VOLTAGE	125 V		250 V			277 V		
	15(A)	20(A)	15(A)	20(A)	30(A)	15(A)	20(A)	30(A)
PLUG	5-15 P	5-20 P	6-15 P	6-20 P	6-30 P	7-15 P	7-20 P	7-30 P
RECEPTACLE	5-15 R	5-20 R	6-15 R	6-20 R	6-30 R	7-15 R	7-20 R	7-30 R

RETROAIRE™ Specification and Performance

Model: R35C/H

Product Description

- RetroAire Replacement Packaged Terminal Air Condition/ Heat Pumps units are straight cooling (PTAC) or heat pump systems (PTHP).
- Both PTAC and PTHP configurations fit wall sleeves.
- Heat pumps (PTHP) operate in mechanical heat mode down to outdoor temperature of 40°F (4.4°C). Below 40°F (4.4°C) heating is accomplished by auxiliary heat option.
- ETL listed to UL484, CAN/CSA 22.2 No. 117.

RetroAire PTAC/PTHP

- R-410A refrigerant.
- High-efficiency rotary compressors.
- Two fan speeds.
- Positive condensate re-evaporation to improve efficiency.
- PTAC/PTHP units are available in nominal sizes of 9,000 Btu/h, (2.6kW) 12,000 Btu/h (3.5kW) or 15,000 Btu/h (4.4kW).
- PTAC units (straight cooling only) are available at 18,000 Btu/h (5.3kW).
- Coefficient of performance (COP) ratings 2.7 for heat pumps.
- EER as high as 9.0

Standard Controls And Components

Construction

- Chassis constructed of 20 gauge galvanized steel.
- Condenser baffle options accommodate extended wall sleeve applications. (Consult manufacturer).
- Powder-coated condenser and evaporator drain pan.
- Foam strip seal for supply air duct.
- Weather strip insulation.

Air Systems

- Thermally-protected motors PSC type.
- Indoor fan forward curved type, directly mounted to motor shaft.
- Unit mount controls include field selection switch to control indoor fan by either cycling with compressor operation or continuously with unit.

Condensate Removal

- Outdoor fan incorporates condensate slinger ring. Condensate is thrown onto coil, where it evaporates.
- Thermostatic drain pan valve for condensate elimination when outdoor temperature drops below 60°F (15°C) (heat pump units only).

Controls

- Unit-mounted operating controls include thermostat, fan speed control, heat/cool switch, fan cycle switch, fresh air switch (if equipped).
- Use of optional 1-stage thermostat.
- Low ambient protection — see "Microprocessor control board" for details.
- Ability to control a normally-open or normally-closed motor valve switch (on hydronic heat units only). Valve controls must be ordered for 24V or line voltage.
- All hydronic heat units include molex plugs for connection of hydronic valve motor.
- Optional wall thermostat controls include fan speed control and fresh air switch (if equipped).
- Equipped with manual reset high pressure switch which prevents abnormal high pressure operation.

Microprocessor Control Board

- Universal control board used in straight cooling, electric resistance heat, hydronic heat, or cooling/heat pump applications.
- Random start timer prevents multiple units from simultaneous startups after power interruption or on initial power-up.
- Fan purge — fan remains on for 60 seconds after heat/ cool is satisfied.
- Anti-short-cycle compressor protection prevents compressor from rapid cycling.
- Freeze-protection prevents evaporator coil freeze up.
- Low ambient lockout prevents compressor operation in outdoor temperatures less than 40°F (4.4°C). (On PTHP units, control causes automatic changeover to auxiliary heat, if installed.)
- Test operation — all timers are temporarily suppressed to allow ease of testing or troubleshooting.
- Control board LED provides self-diagnostic troubleshooting codes, see Installation, Operation & Maintenance Manual for Sequence of Operation.

Manufacturer Installed Options (Consult manufacturer)

- 265V (12 & 15 Models only)
- 115V (09 Only)
- Corrosion-resistant coil option — used for seacoast and harsh-environment usage; coated aluminum fin/copper tube condenser coil.
- Motorized fresh-air damper
- Supplemental electric heat
- Hydronic heat controls
- Front air intake

Field-Installed Accessories

- Hydronic heat — coil assembly is shipped loose for field installation.
- Wall thermostat — digital 1- stage.
- Wall sleeves, louvers, and cabinets.
- Aquastat - delays fan start-up until coil reaches 100°F (38°C) to virtually eliminate "cold" blow condition.
- Hydronic control valve , water 2 way & 3 way.
- Hydronic control valve, steam 2 way.
- Hydronic isolation valve, 1/2 in sweat connection.
- Cabinet front kit.

Indoor Coil Freeze Protection *(standard)*
This feature will prevent the indoor coil from freeze up in the cooling mode.

- Indoor coil freeze up can occur due to a dirty air filter, restricted or poor air flow, low refrigerant charge or low room or outdoor temperatures.
- This in turn can cause compressor damage.
- Should a freeze condition be detected, the compressor and outdoor fan will be switched off for a minimum of three minutes until the freeze condition is satisfied.
- During this time the indoor fan will continue to run to aid in the defrost process.

Condensate Removal *(standard)*
The RetroAire replacement unit (cooling operation) is designed to eliminate condensate by slinging it onto the outdoor coil.

- Condensate drains through the bulkhead to the area near the outdoor fan.
- As part of its normal operation, the unit will produce condensate and collect it in the base pan of the unit. There it is picked up by the outdoor fan slinger ring and deposited onto the condenser coil. During the cooling season, this improves the unit's efficiency by maintaining reduced refrigeration system pressures.
- Base pan has overflow notches-if too much condensate is produced notches allow condensate to flow out of the base pan and into the wall sleeve out of the building.

Thermostatic Drain Pan Valve *(standard on heat pump units)*
On heat pump models (PTHP), condensate can accumulate in the outdoor drain pan during the heat pump cycle.

- PTHP units include a thermostatic drain valve that opens when outdoor temperatures fall below 60°F (15°C).
- When the drain valve opens, condensate flows from the drain pan onto the bottom of the wall sleeve, where it drains to the outside.
- This keeps the base pan free of condensate water, which could otherwise freeze during colder outdoor temperatures.

Random Start Feature *(standard)*
The random start feature is initiated on initial power-up or after a power interruption.

- The controller adds a random time delay (from 5–120 seconds) on start-up, preventing the compressor from starting.
- This staggers the starting of multiple units in a single facility, preventing a large surge that might occur if all units started at the same time.

Anti-Short Cycle Timer *(standard)*
The microprocessor control uses this timing to prevent short-cycling of the compressor.

- When the compressor cycles off on a heating or cooling call, the controller starts a 180-second timer.
- The compressor will not be allowed to start until this time has elapsed.
- On initial power-up or after a power failure, this timing occurs after the random start timing.

Power Cord With Integral Safety Protection *(standard)*
All PTAC/PTHP units rated 250V or less are equipped with a power cord with integral safety protection as standard.

- Providing personal shock protection as well as arcing and fire prevention, the device is designed to sense any damage in the line cord and disconnect power before a fire can occur.
- Tested in accordance with Underwriters Laboratories, the cord set also offers a unique "passive" operation, meaning the unit does not require resetting if main power is interrupted.

Heat Pump

- Heat pump units are "Limited Range" and should be equipped with back-up electric resistance or hydronic heat.
- Limited Range heat pumps are designed to operate when outdoor temperatures are between 75°F(24°C) and 40°F(4.4°C) and with a maximum indoor temperature of 80°F(26.6°C).
- The unit is equipped with a reversing valve that is energized for cooling and de-energized in heating mode.
- Electric heating or hydronic heat will operate using the on-board control logic below the operating conditions of the heat pump.

Hydronic Heating *(optional)*
An optional hydronic heat package may be selected in lieu of electric heat. Heating operation is essentially the same as that of units with electric heat.

Aquastat Connection *(optional)*
All replacement PTAC/PTHP's with hydronic heat are supplied with a standard line volt or (*low volt) Aquastat connection. The field installed Aquastat delays the fan operation until the hydronic coil reaches a temperature of 100°F (38°C). **See chassis coding pg. 1*

Motorized Fresh Air Damper *(optional)*
The optional motorized fresh air damper allows fresh air into the space to be conditioned. When the Fresh Air switch is in the "YES" position the damper door is open and allows fresh air into the space. This feature is only available when the indoor fan is on. When the damper door switch is in the "NO" position, the damper door is closed and does not allow air in the space.

Optional Wall-Mounted Thermostats

Thermostats compatible with your PTAC/PTHP unit:

- Select part number 240008208 from the latest RetroAire price list for this option. This is a single stage, cool/heat, thermostat that can be used in all RetroAire cooling, heating or heat pump applications.
- The thermostat has an adjustable setpoint range of between 55°F(27°C) and 95°F(35°C).

Selecting a thermostat *(by others)*
When selecting a thermostat choose a single stage heat/cool, 24V thermostat.

Straight cooling with electric heat or hydronic heat, select a thermostat that is compatible with a cooling/electric heat system. Thermostat should have "**R**", "**Y**", "**W**", **"C"** and "**G**" terminals.

Heat pump with electric heat (PTHP), select a thermostat that is compatible with cooling/single-stage heat/heat pump system. Thermostat should have "**R**", "**Y**", "**O**", **"C"** and "**G**" terminals.

RetroAire units are single stage heating only. The electric heat and heat pump will not operate simultaneously.

ELECTRICAL PERFORMANCE

R35C09 & R35H09 - Electrical Data																
Power Supply		Compressor		ID Fan Motor		OD Fan Motor		Electric Heat				Unit Electrical Ratings				
Voltage	Min V	RLA	LRA	FLA	Hp	FLA	Hp	Htr #	Htr V	Htr W	Htr A	TCA	THA	MCA	MOCP	Power
115V/1ph/60Hz	104	8	45.6	1.4	0.09	1.6	0.125	0	N/A	N/A	N/A	11.0	N/A	13.0	20	5-15P
*208/230V/ 1ph/60Hz	197	3.9	20.0	0.6	0.08	0.71	0.09	0	N/A	N/A	N/A	5.2	N/A	6.2	15	6-15P
								2	208	1636	7.9		8.5	10.6	15	6-15P
									230	2000	8.7		9.3	11.6		
								3	208	2454	11.8		12.4	15.5	20	6-20P
									230	3000	13.0		13.6	17.1		
								4	208	3271	15.7		16.3	20.4	25	6-30P
									230	4000	17.4		18.0	22.5		
								5	208	4089	19.7		20.3	25.3	30	6-30P
									230	5000	21.7		22.3	27.9		
**208/230V 1ph/60Hz	197	4.0	22.2	0.6	0.08	0.71	0.09	0	N/A	N/A	N/A	5.3	N/A	6.3	15	6-15P
265V/1ph/60Hz	240	3.32	18.8	0.67	0.08	0.71	0.09	0	N/A	N/A	N/A	4.7	N/A	5.5	15	7-20P
								2	265	2655	10.0		10.7	13.4	15	7-20P
								3	265	3983	15.0		15.7	19.6	20	7-20P
								4	265	5310	20.0		20.7	25.9	30	7-30P

* Toshiba Compressors

**Tecumseh Compressors

R35C12 & R35H12 - Electrical Data																
Power Supply		Compressor		ID Fan Motor		OD Fan Motor		Electric Heat				Unit Electrical Ratings				
Voltage	Min V	RLA	LRA	FLA	Hp	FLA	Hp	Htr #	Htr V	Htr W	Htr A	TCA	THA	MCA	MOCP	Power
**208/230V/ 1ph/60Hz	197	5.6	29	0.6	0.08	0.71	0.09	0	N/A	N/A	N/A	6.9	N/A	8.3	15	6–15P
								2	208	1636	7.9		8.5	10.4	15	6–15P
									230	2000	8.7		9.3	11.5		
								3	208	2454	11.8		12.4	15.3	20	6–20P
									230	3000	13		13.6	16.9		
								4	208	3271	15.7		16.3	20.3	25	6-30P
									230	4000	17.4		18	22.3		
								5	208	4089	19.7		20.3	25.2	30	6-30P
									230	5000	21.7		22.3	27.8		
265V/ 1ph/60Hz	240	4.6	20	0.67	0.08	0.71	0.09	0	N/A	N/A	N/A	6.0	N/A	7.1	15	7-20P
								2	265	2655	10.0		10.7	13.4	15	7-20P
								3	265	3983	15.0		15.7	19.6	20	7-20P
								4	265	5310	20.0		20.7	25.9	30	7-30P

**Tecumseh Compressors

ELECTRICAL PERFORMANCE

R35C15 & R35H15 - Electrical Data																
Power Supply		Compressor		ID Fan Motor		OD Fan Motor		Electric Heat				Unit Electrical Ratings				
Voltage	Min V	RLA	LRA	FLA	Hp	FLA	Hp	Htr #	Htr V	Htr W	Htr A	TCA	THA	MCA	MOCP	Power
*208-230V/ 1ph/60Hz	197	7.65	40	0.6	0.08	0.71	0.09	0	N/A	N/A	N/A	8.7	N/A	10.9	15	6-15P
								2	208	1636	7.9		8.5	10.6	15	6-15P
									230	2000	8.7		9.3	11.6		
								3	208	2454	11.8		12.4	15.5	20	6-20P
									230	3000	13.0		13.6	17.1		
								4	208	3271	15.7		16.3	20.4	25	6-30P
									230	4000	17.4		18.0	22.5		
								5	208	4089	19.7		20.3	25.3	30	6-30P
									230	5000	21.7		22.3	27.9		
**208-230V/ 1ph/60Hz	197	7.4	33	0.6	0.08	0.8	0.09	0	N/A	N/A	N/A	8.7	N/A	10.6	15	6-15P
								2	208	1636	7.9		8.5	10.4	15	6-15P
									230	2000	8.7		9.3	11.5		
								3	208	2454	11.8		12.4	15.3	20	6-20P
									230	3000	13.0		13.6	16.9		
								4	208	3271	15.7		16.3	20.3	25	6-30P
									230	4000	17.4		18.0	22.3		
								5	208	4089	19.7		20.3	25.2	30	6-30P
									230	5000	21.7		22.3	27.8		
265V/1ph/60Hz	240	6.0	28	0.67	0.08	0.71	0.09	0	N/A	N/A	N/A	7.4	N/A	8.9	15	7-20P
								2	265	2655	10.0		10.7	13.4	15	7-20P
								3	265	3983	15.0		15.7	19.6	20	7-20P
								4	265	5310	20.0		20.7	25.9	30	7-30P

* Toshiba Compressors

**LG Compressors

R35C18 - Electrical Data																
Power Supply		Compressor		ID Fan Motor		OD Fan Motor		Electric Heat				Unit Electrical Ratings				
Voltage	Min V	RLA	LRA	FLA	Hp	FLA	Hp	Htr #	Htr V	Htr W	Htr A	TCA	THA	MCA	MOCP	Power
208-230V/ 1ph/60Hz	197	8.3	44	0.6	0.08	0.71	0.09	0	N/A	N/A	N/A	9.6	N/A	11.7	15	6-15P
								2	208	1636	7.9		8.5	10.6	15	6-15P
									230	2000	8.7		9.3	11.6		
								3	208	2454	11.8		12.4	15.5	20	6-20P
									230	3000	13.0		13.6	17.1		
								4	208	3271	15.7		16.3	20.4	25	6-30P
									230	4000	17.4		18.0	22.5		
								5	208	4089	19.7		20.3	25.3	30	6-30P
									230	5000	21.7		22.3	27.9		

Note: The listed THA value is the highest of both heating methods - heat pump & electric heat

ELECTRICAL PERFORMANCE

R35 C/H Hydronic Heat																			
Model	Hydronic Coil Code Part Number	Air Entering Dry Bulb		Air Entering Wet Bulb		Air Entering Flow Rate		Water Flow		Water Entering		Capacity		Pressure Drop		Water Leaving		Water Delta	
		°F	°C	°F	°C	cfm	m^3/min	gpm	lpm	°F	°C	Btu/h	kW	ft H2O	m H2O	°F	°C	°F	°C
R35	104000130	70	21	56	13	450	12.7	2.9	11.1	180	82	14,300	4.2	2.8	0.8	170	77	10	6
						400	11.3	2.8	10.4	180	82	13,500	4.0	2.5	1.8	170	77	10	6
						450	12.7	1.7	6.4	140	60	8,400	2.5	1.1	0.3	130	54	10	6
						400	11.3	1.6	6.1	140	60	7,900	2.3	1.0	0.3	130	54	10	6
						450	12.7	3.0	11.4	180	82	14,400	4.2	2.9	0.9	170	77	10	5
						400	11.3	3.0	11.4	180	82	13,600	4.0	2.9	0.9	171	77	9	5
						450	12.7	3.0	11.4	140	60	9,000	2.6	3.1	0.9	134	57	6	3
						400	11.3	3.0	11.4	140	60	8,600	2.5	3.1	0.9	134	57	6	3
						450	12.7	2.0	7.6	180	82	13,700	4.0	1.4	0.4	166	74	14	8
						400	11.3	2.0	7.6	180	82	13,000	3.8	1.4	0.4	167	75	13	7
						450	12.7	2.0	7.6	140	60	8,600	2.5	1.5	0.5	131	55	9	5
						400	11.3	2.0	7.6	140	60	8,200	2.4	1.5	0.5	132	55	8	5
						450	12.7	1.0	3.8	180	82	12,100	3.5	0.4	0.1	155	68	25	14
						400	11.3	1.0	3.8	180	82	11,500	3.4	0.4	0.1	156	69	24	13
						450	12.7	1.0	3.8	140	60	7,500	2.2	0.4	0.1	125	52	15	9
						400	11.3	1.0	3.8	140	60	7,200	2.1	0.4	0.1	125	52	15	8
R35	104000305	70	21	56	13	450	12.7	7.2	27.2	180	82	35,100	10.3	1.2	0.4	170	77	10	6
						400	11.3	6.7	25.3	180	82	32,600	9.5	1.1	0.3	170	77	10	6
						450	12.7	4.1	15.4	140	60	20,100	5.9	0.5	0.1	130	54	10	6
						400	11.3	3.8	14.4	140	60	18,700	5.5	0.4	0.1	130	54	10	6
						450	12.7	3.0	11.4	180	82	30,500	8.9	0.3	0.1	159	71	21	12
						400	11.3	3.0	11.4	180	82	28,800	8.4	0.3	0.1	160	71	20	11
						450	12.7	3.0	11.4	140	60	18,900	5.5	0.3	0.1	127	53	13	7
						400	11.3	3.0	11.4	140	60	17,900	5.2	0.3	0.1	128	53	12	7
						450	12.7	2.0	7.6	180	82	27,400	8.0	0.1	0.0	152	67	28	16
						400	11.3	2.0	7.6	180	82	26,900	7.9	0.1	0.0	153	67	27	15
						450	12.7	2.0	7.6	140	60	16,900	4.9	0.1	0.0	123	50	17	10
						400	11.3	2.0	7.6	140	60	16,200	4.7	0.1	0.0	124	51	16	9
						450	12.7	1.0	3.8	180	82	21,100	6.2	0.0	0.0	137	58	43	24
						400	11.3	1.0	3.8	180	82	20,400	6.0	0.0	0.0	138	59	42	23
						450	12.7	1.0	3.8	140	60	11,800	3.5	0.0	0.0	116	47	24	13
						400	11.3	1.0	3.8	140	60	11,400	3.3	0.0	0.0	117	47	23	13

Performance Data - Cooling

Models R35C	Voltage		Cooling Capacity	EER	Sensible Heat Ratio	Indoor Air Flow	Fresh Air Inlet Flow	Outdoor Sound Level	Shipping Weight
			Btu/h (kW)			cfm (l/s)	cfm (l/s)	dBa	lbs (kg)
R35C 09	A	115	9000 (2.7)	9.0	0.79	440 (207.7)	35 (17)	75	140 (63.5)
	D	208/230				350 (165.2)			
	E	265	9400 (2.8)	8.9		440 (207.7			
R35C 12	D	208/230	11600 (3.4)	8.4	0.66	350 (165.2)	50 (24)	69	140 (63.5)
	E	265	11700 (3.4)			440 (207.7)			
R35C 15	D	208/230	14400 (4.2)	7.8	0.69	400 (188.8)	60 (28)	70	140 (63.5)
	E	265				450 (212.4)			
R35C 18	D	208/230	15600 (4.6)	7.7	0.67	380 (179.3)	95 (45)	69	140 (63.5)

Performance Data - Heating

Models R35H	Voltage		Cooling Capacity	EER	Indoor Air Flow Cooling	Heating Capacity	COP	Indoor Air Flow Heating	Sensible Heat Ratio	Fresh Air Flow	Outdoor Sound Level	Shipping Weight
			Btu/h (kW)		cfm (l/s)	Btu/h (kW)		cfm (l/s)		cfm (l/s)	dBa	lbs (kg)
R35H 09	D	208/230	9000 (2.7)	8.9	350 (165.2)	8500 (2.5)	2.7	400 (189)	0.79	35 (17)	75	140 (63.5)
	E	265	9400 (2.8)	8.8	440 (207.7)	9100 (2.7)		450 (212)				
R35H 12	D	208/230	11400 (3.3)	8.4	350 (165.2)	11200 (3.3)	2.6	400 (189)	0.66	50 (24)	69	
	E	265			400 (188.8)			450 (212)				
R35H 15	D	208/230	14400 (4.2)	7.7	400 (188.8)	14800 (4.3)	2.5	450 (212)	0.69	60 (28)	7070	
	E	265	14000 (4.1)	7.8	450 (212.4)	14200 (4.2)		500 (236)				

GENERAL PRODUCT INFORMATION

Figure 1 R35C | R35H Chassis

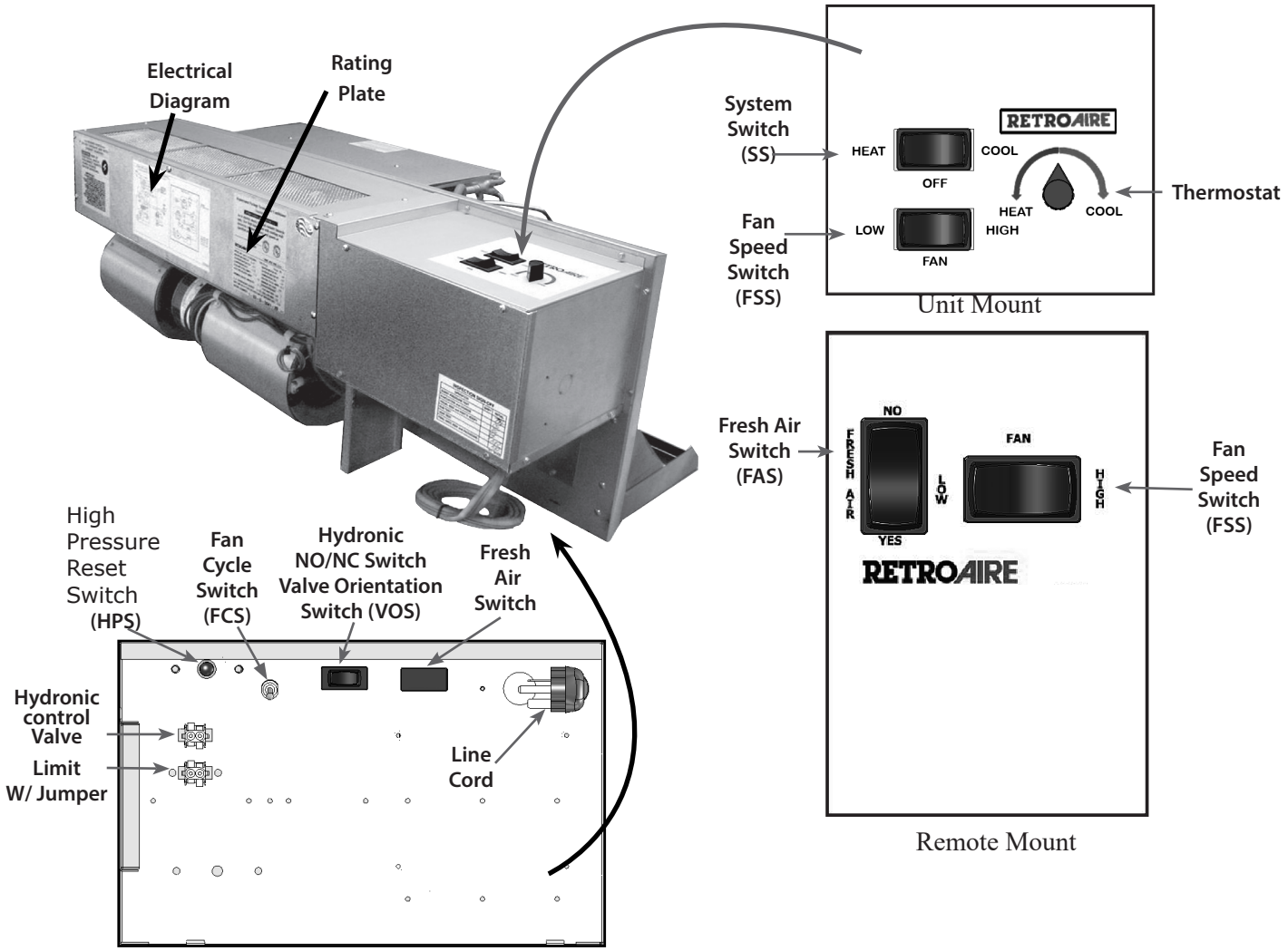

Figure 2 R35C | R35H Chassis

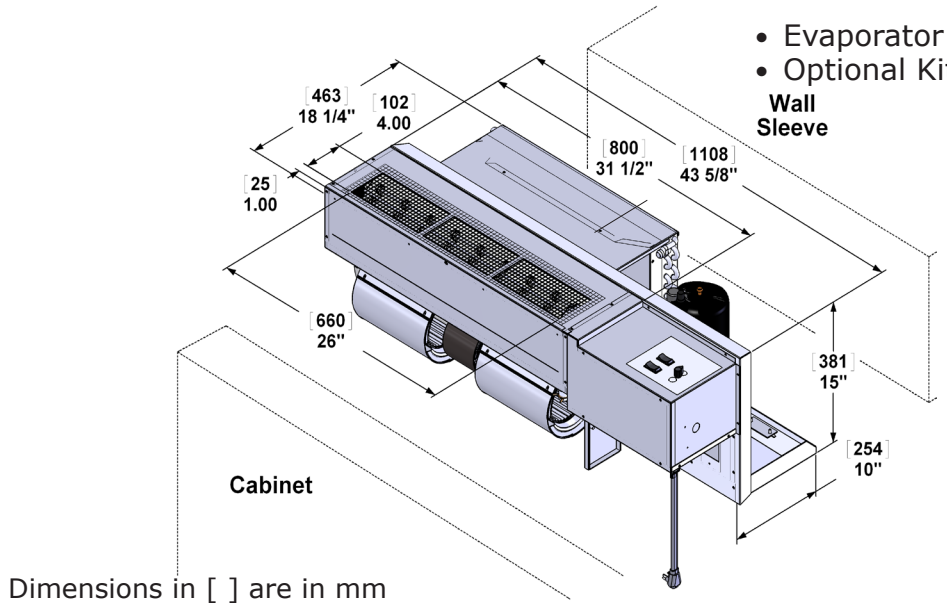

Dimensions in [ ] are in mm

Note:

- Evaporator air intake bottom is standard
- Optional Kit for front air intake

Figure 3 R35C | R35H Unit Cabinet And Wall Sleeve

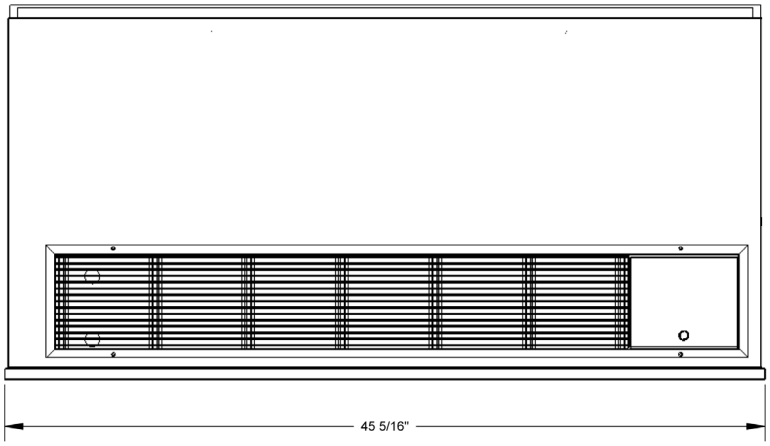

TOP - 550001304

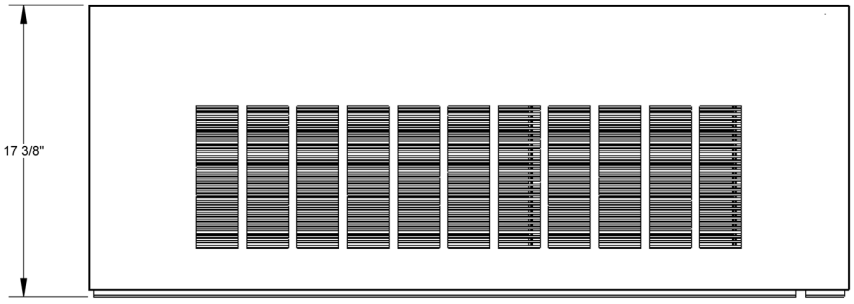

FRONT - 550001298

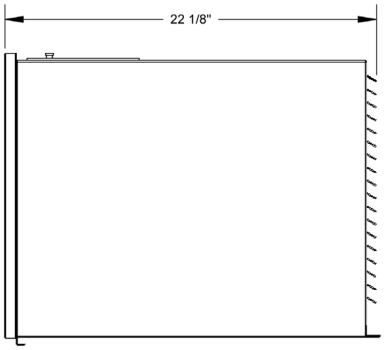

Figure 4 R35C | R35H Cabinet And Wall Sleeve

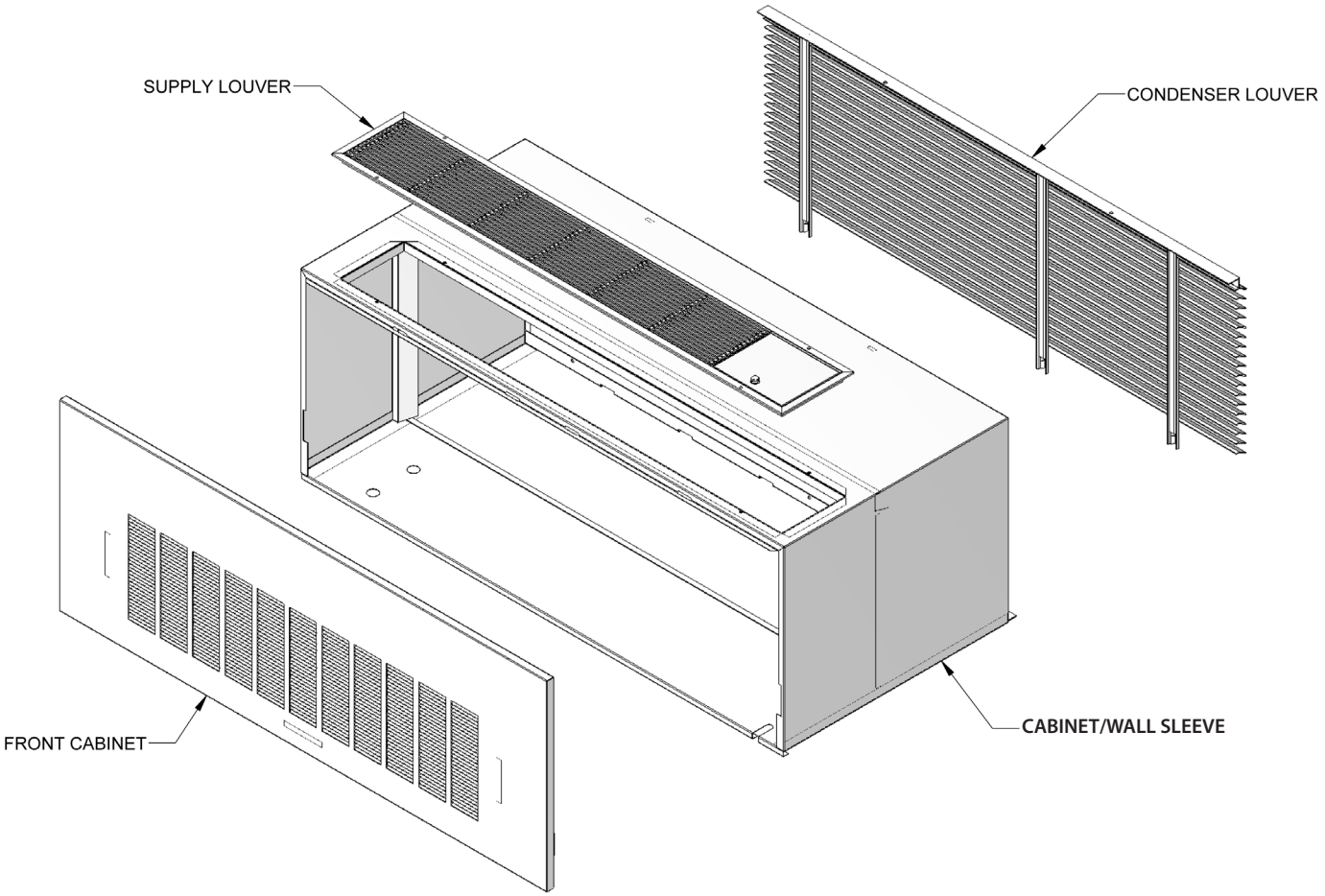

RETROAIRE™

R35 C/H Misc. Product Data

Operating Range			
Mode		**OD Amb. Temp**	**ID Amb. Temp**
Cooling	Max	105ºF (41ºC) DB	80ºF (27ºC) DB
	Min	32ºF (0ºC) DB	60ºF (19ºC) DB
Heating	Max	75ºF (24ºC) DB	80ºF (27ºC) DB
	Min	40ºF (4.4ºC) DB	65ºF (18ºC) DB

Direct Chassis Replacement for :

Direct replacement for: Type 45/16 by AAF, McQuay, Comitale, Ice Air, American Standard, Remington, Singer, Nelson Aire, Ice Cap, Islandaire, Carteret, Adirondack Aire & McQuay PNES/PNHS

Electrical Plug Configurations

VOLTAGE	125 V		250 V			277 V		
	15(A)	20(A)	15(A)	20(A)	30(A)	15(A)	20(A)	30(A)
PLUG	 5-15 P	 5-20 P	 6-15 P	 6-20 P	 6-30 P	 7-15 P	 7-20 P	 7-30 P
RECEPTACLE	 5-15 R	 5-20 R	 6-15 R	 6-20 R	 6-30 R	 7-15 R	 7-20 R	 7-30 R

ECR international
2201 Dwyer Avenue, Utica, NY 13501
Tel. 800 325 5479
www.ecrinternational.com